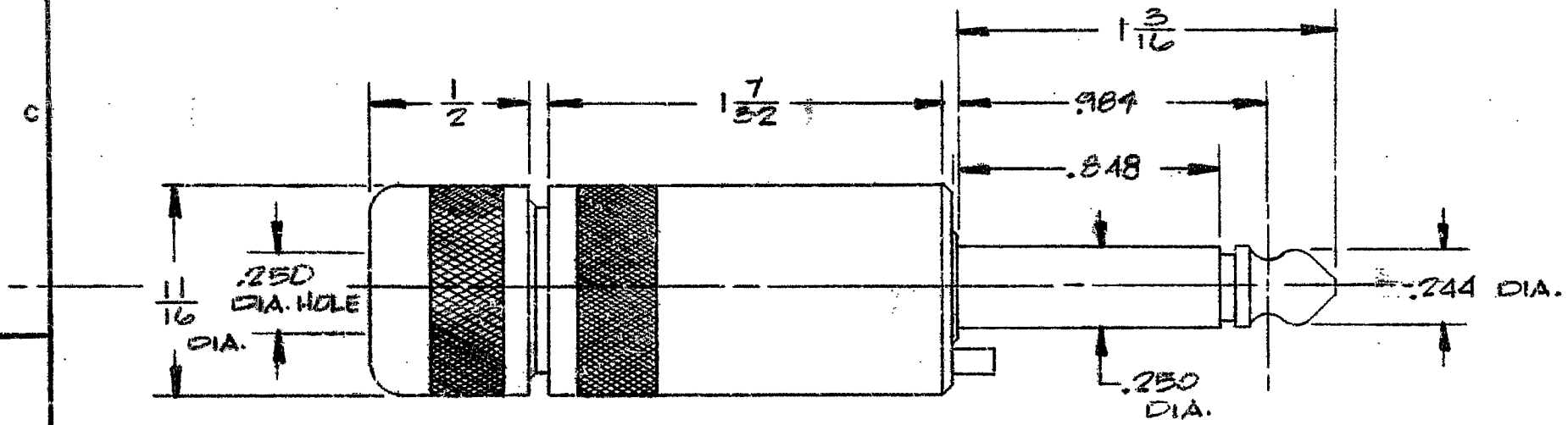

SPECIFICATIONS:

1. BODY, HANDLE, CAP AND TIP ROD - BRASS - NI. PL.
2. TERMINALS AND TERMINAL SCREWS - NI. PL.
3. INSULATORS - PHENOLIC.
4. WASHER - RUBBER.
5. HANDLE INSULATOR - GRAY FIBRE.

☆ STAR SYMBOL DENOTES CRITICAL DIMENSION, SEE S/C ENGINEERING STANDARD ES-0001.

SIZE	WIDTH	MULT.	LBS. PER M	TEMPER

THIS DRAWING DESCRIBES A DESIGN CONSIDERED PROPRIETARY IN NATURE, DEVELOPED AND MANUFACTURED BY SWITCHCRAFT, INC., AND IS RELEASED ON A CONFIDENTIAL BASIS FOR IDENTIFICATION PURPOSE ONLY.

UNLESS OTHERWISE SPECIFIED:

1 - DECIMAL DIMENSIONS ± .005
2 - FRACTIONAL DIMENSIONS ± 1/64
3 - ANGLES ± 1/2°
4 - ALL DIA'S CONCENTRIC WITHIN .005 T.I.R.
5 - ALL DIMENSIONS IN INCHES
6 - FOR THREADS USE UNIFIED PLUG AND RING GAGES ONLY.
7 - REMOVE ALL BURRS
8 - PART TO BE FABRICATED AS SPECIFIED. MAKE NO DIMENSIONAL ALLOWANCES FOR APPLIED FINISHES, I.E., PLATING, PAINTING, ETC.
9 - HOLES ON SAME CENTERLINE MUST BE ALIGNED WITHIN ± .002

DO NOT SCALE DRAWING

DRAWN BY C. JONES	DATE 5-27-77	FINISH	
CHECKED BY R.V.	DATE 6-1-77	PER FINISH SPEC. NO.	
APPROVED BY L.C.	DATE 6-3-77	MATERIAL	
SCALE (2X)		PER MAT. SPEC. NO.	
FIRST USED ON		SWITCHCRAFT	
NAME (2) CONDUCTOR SILENT PLUG		PART NO. 172	ISSUE D
		SHEET 1 OF 1	

SYM	REVISION	BY	DATE
C	ECO 20627	TA	7/29/76
D	ECO 20847	SF	1/28/77

ROUTING

PAXTON