MICRO SWITCH
a Honeywell Division
FED.MFG.CODE 91929

SWITCH - BASIC

CATALOG LISTING
YZ-RX62-D584

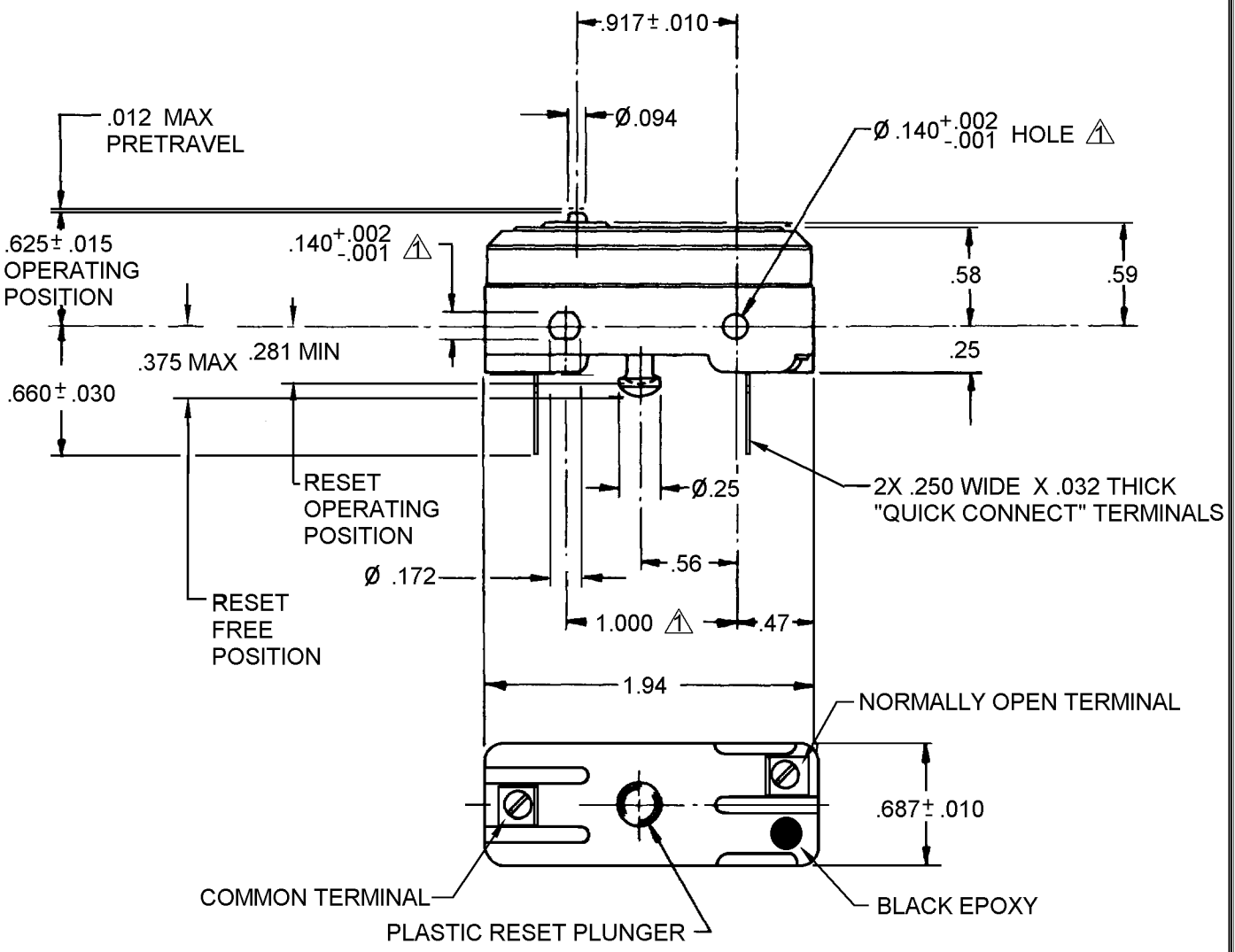

NOTES
⚠1 MOUNTING HOLES WILL ACCEPT PINS OR SCREWS OF
Ø .139 MAX ON 1.000 ± .002 CENTERS

ANSI Y14.5M-1982 APPLIES

THIS DRAWING COVERS A PROPRIETARY ITEM AND IS THE PROPERTY OF MICRO SWITCH, A DIVISION OF HONEYWELL. THIS DRAWING IS NOT TO BE COPIED OR USED WITHOUT THE APPROVAL OF MICRO SWITCH.

THIRD ANGLE PROJECTION

CHARACTERISTICS	ELECTRICAL DATA	SCALE FULL / DO NOT SCALE PRINT
OPERATING FORCE ---------- 4 OZ MAX OVERTRAVEL ---------- .005 MIN RESET CHARACTERISTICS OPERATING FORCE ---------- 2-10 OZ OVERTRAVEL ---------- .015 MIN	CONTACT ARRANGEMENT S.P.N.O. L67 15A 125, 250 OR 480 VAC 1/4HP 125 VAC, 1/2HP 250 VAC 1/2A 125 VDC, 1/4A 250 VDC **FIG. 67**	UNLESS OTHERWISE SPECIFIED TOLERANCES ARE ONE PLACE (.0) ±.030 TWO PLACE (.00) ±.015 THREE PLACE (.000) ±.005 ANGLES ± WEIGHT .055 LB

REPLACES	X115125-YZ		
RELEASE NO.	ECO-0001163		
CATALOG LISTING	YZ-RX62-D584	PAGE 1 OF 1	
ISSUE	A		
CHECK			
REVISIONS			
CHECK			
	18 AUG 03		
CHECK	SAV		
	18 AUG 03		
DRAWN	JAH		
RASTER			